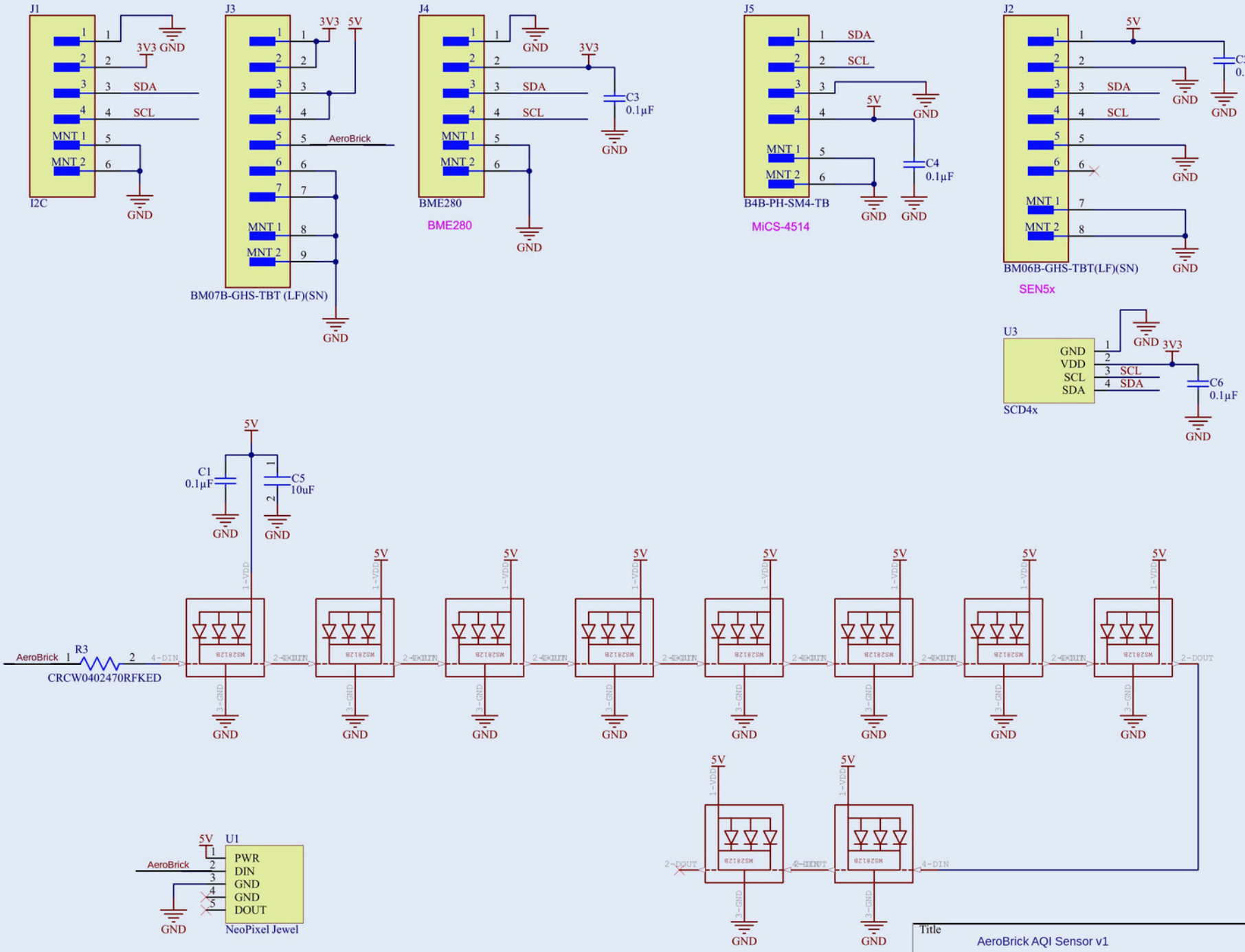

Title	AeroBrick AQI Sensor v1	
Size: Letter	Number	Revision: 1
Date: 1/4/2026		Sheet 1 of 1
File: C:\Users\..\AeroBrick.SchDoc		Drawn By: Dipan Dangi